STERILE FLOW SIGHT GLASS

SG-SERIES

SG-Series consist of sanitary fitting, polished, Stainless Steel Body and O-Ring Seal are designed for high purity hygienic fluids system. Directly mounted in pipe line with sterile sanitary fittings. To Provide a clear visual which could detect any fluids in line through a transparent glass tube.

Approvals: EHC CE 1128

Technical Data

Material: Body: Polished SS316 ; Connection: Sanitary Fitting SS316;
Glass Tube: Borosilicate Glass ; O-Ring: Viton, Silicone and EPDM available
(All gaskets meet USP Class VI, are FDA compliant and are fully traceable)
Process Connection: ISO2852: ⅜", ½", ¾", 1", 1½", 2"; DIN32676: 10, 15, 20, 25, 40, 50
Operating Pressure Limited: Up to 150 psig @ 25°C ; Up to 20 psig @150°C
Operating Temperature Limited: Up to 150°C (300°F)

Dimensions & Parts List

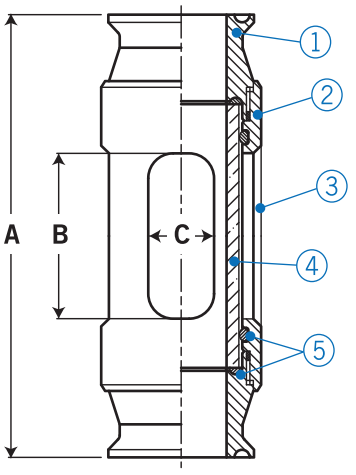

Dimensions Data-mm

Size	A (±1.0mm)	B (±1.0mm)	C (±1.0mm)	Approx. Weight
3/8"	65	20	9	0.15 kg
1/2"	76	20	9	0.20 kg
3/4"	87	30	11	0.20 kg
1"	91	30	16	0.45 kg
1½"	105	40	24	0.50 kg
2"	120	48	35	0.70 kg

Parts Name & Material List

Item	Parts Name	Material
1	Sanitary Fitting	SS316
2	Body	SS316
3	Tube Housing	SS316
4	Lens Tube	Borosilicate Glass Tube
5	O-Ring	Viton or Silicone or EPDM

Flow Direction

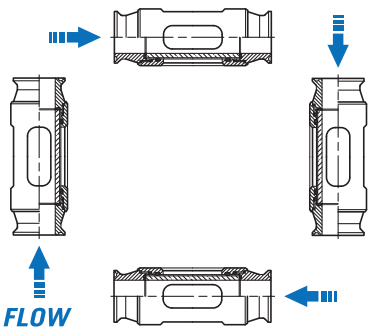

Any flow direction available.

Ordering Information

SG-Series	Code	Body Material
	S	Polished SS316

Code	O-Ring Material				
V	Viton	S	Silicone	E	EPDM

Code	Lens Tube Material
S	Borosilicate Glass Tube

Code	Process Connection Type		
ISO	ISO2852	DIN	DIN32676

Code	Process Connection Size
ISO	(1) 3/8" (2) 1/2" (3) 3/4" (4) 1" (5) 1½" (6) 2"
DIN	(7) 10 (8) 15 (9) 20 (10) 25 (11) 40 (12) 50

Code	CE 1128 Mark Request
1	With label sticker
2	With S.S nameplate
3	Stamp
4	Without

SG-Series							Complete Ordering Code

WWW.NEW-FLOW.COM • TEL: 886-7-8135500 • FAX: 886-7-8225588 • Email: info@new-flow.com